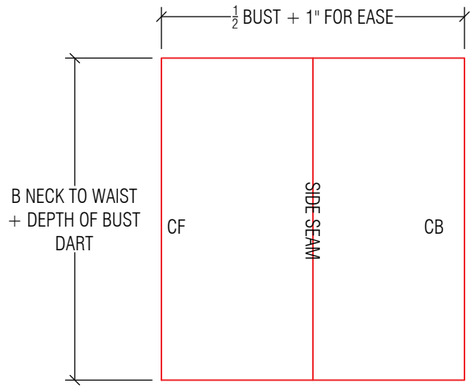
½ BUST + 1" FOR EASE
B NECK TO WAIST + DEPTH OF BUST DART
CF
SIDE SEAM
CB

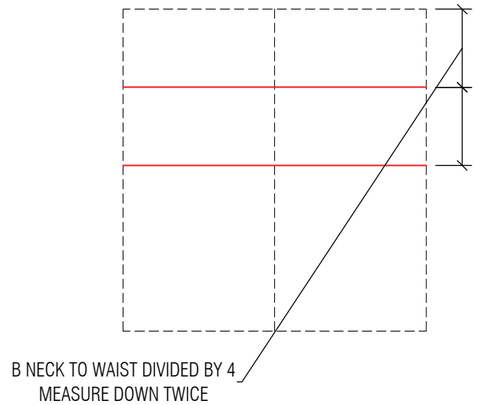
B NECK TO WAIST DIVIDED BY 4
MEASURE DOWN TWICE

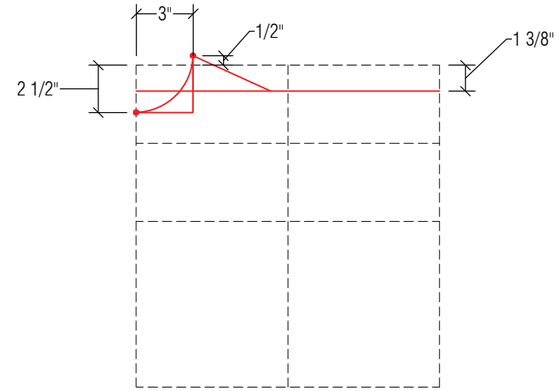
3"
1/2"
2 1/2"
1 3/8"

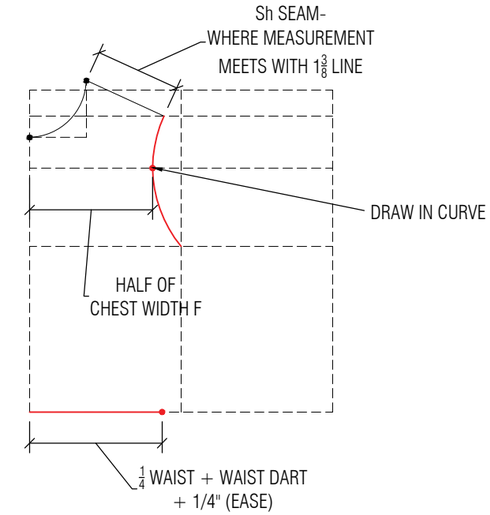
Sh SEAM-
WHERE MEASUREMENT
MEETS WITH 1⅜ LINE
DRAW IN CURVE
HALF OF
CHEST WIDTH F
¼ WAIST + WAIST DART
+ 1/4" (EASE)

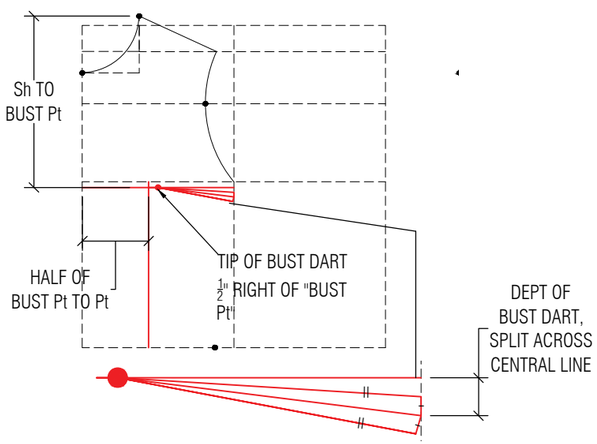
Sh TO
BUST Pt
HALF OF
BUST Pt TO Pt
TIP OF BUST DART
½" RIGHT OF "BUST
Pt"
DEPT OF
BUST DART,
SPLIT ACROSS
CENTRAL LINE

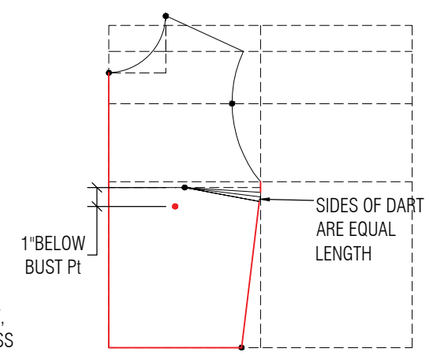
1"BELOW
BUST Pt
SIDES OF DART
ARE EQUAL
LENGTH

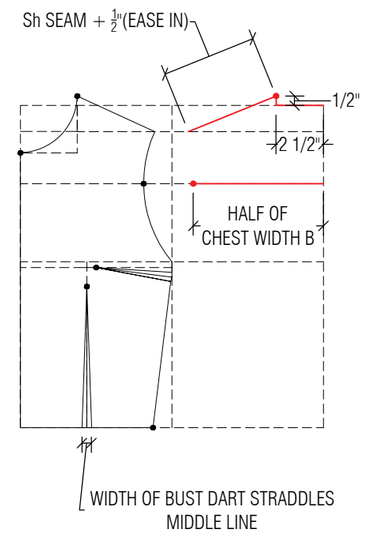
Sh SEAM + ½"(EASE IN)
1/2"
2 1/2"
HALF OF
CHEST WIDTH B
WIDTH OF BUST DART STRADDLES
MIDDLE LINE

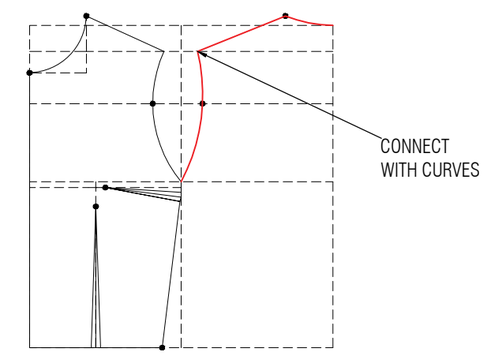
CONNECT
WITH CURVES

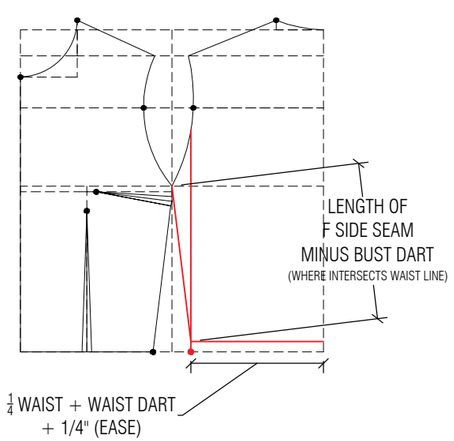
LENGTH OF
F SIDE SEAM
MINUS BUST DART
(WHERE INTERSECTS WAIST LINE)
¼ WAIST + WAIST DART
+ 1/4" (EASE)

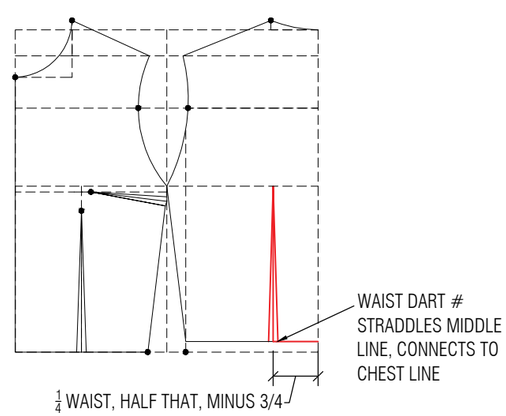
WAIST DART #
STRADDLES MIDDLE
LINE, CONNECTS TO
CHEST LINE
¼ WAIST, HALF THAT, MINUS 3/4

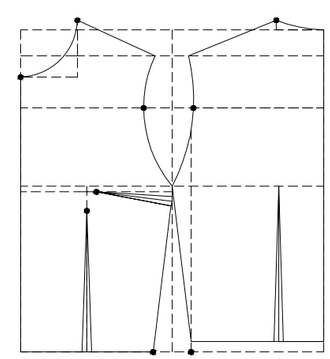

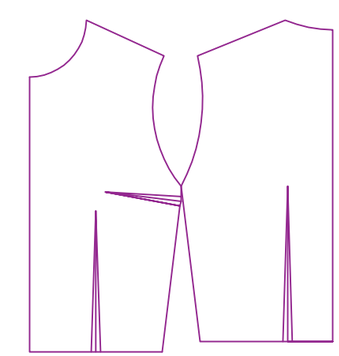

TA DA!